Recessing system cutter holder, modular axial right

for cutting, grooving and copying using AD, AE cutting inserts

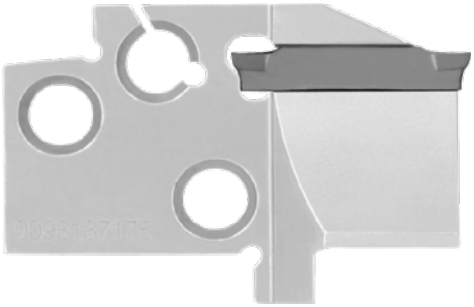

Application

For cutting, grooving and copy turning externally.

Version

- Precision-manufactured steel support, nickel-plated and hardened with clamping element

Advantage

- High-quality and wear-resistant steel support with high-strength clamping element
- precisely manufactured insert setting

Art. no.	*17673 757*
Suitable for knife width	3 mm
Shank width	25 mm
Shaft height	25 mm
Tool design	Right

EAN-Code

4050293732139