Recessing system cutter holder, modular radial right

for cutting, grooving and copying using AD, AE cutting inserts

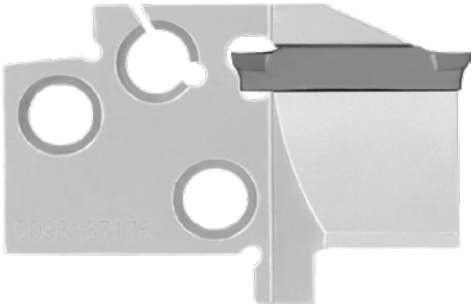

Application:

For cutting, grooving and copy turning externally.

Execution:

- Precision-manufactured steel support, nickel-plated and hardened with clamping element

Advantage:

- High-quality and wear-resistant steel support with high-strength clamping element
- precisely manufactured insert setting

Art. no.	*17673 791*
Brand	ATORN
Manufacturer Part Number	12371196
Suitable for knife width	4 mm
Shank width	25 mm
Shaft height	25 mm
Tool design	Left
Harmonized System Code	82077037
Gross Weight	0.035 kg
Product Group	1FS

EAN

4066107008536